weelko

EN ES IT DE FR



WELLNESS & SPA

TENSOR

Ref. 2249.4.A26.LB

Spa bed equipped with 4 motors that allow adjustment of the height, backrest tilt, footrest, and the entire bed, offering maximum versatility in treatments. Features high-comfort padding and high-quality white PU upholstery, soft to the touch and easy to clean. The mattress, in one piece with 3 sections, provides stability and comfort. Includes adjustable armrests and a headrest with a facial hole for greater ergonomics.

Also available with a brown-finished base, adapting to different cabin styles and professional environments.

Product size: 198x76x68/87 cm
Weight: 104 Kg
Upholstery: PU
Mattress thickness: 11 cm

Packaging size: 204.0x81.0x72.0 cm
G.W.kg 124.0



Features

1. Breather Hole
2. Adjustable Armrest ±10 Cm
3. Angle 0°-65°
4. Angle 0°-25°
5. Up And Down 66/87 Cm
6. Hand Controller Ref. HC005.2249
7. Roll Holder

Options

BED COVER REF-COVER.3SH
FOOT CONTROLLER REF.FC005.2249
WHEELS REF-WH.01.2

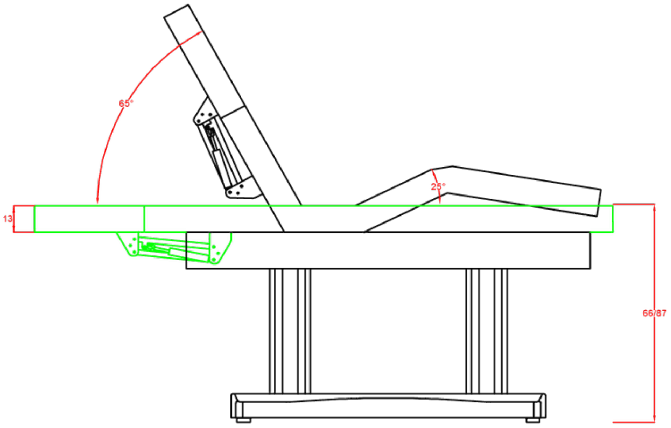
65°
25°
13
66-87

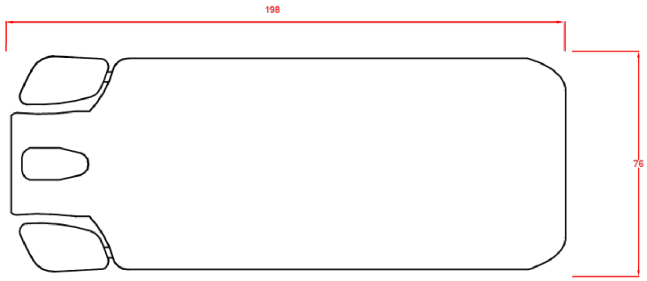
198
76

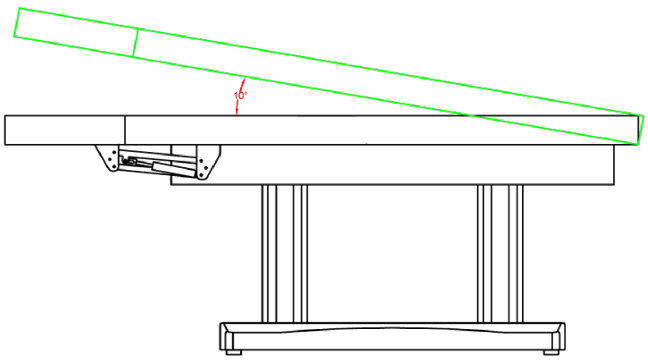
10°

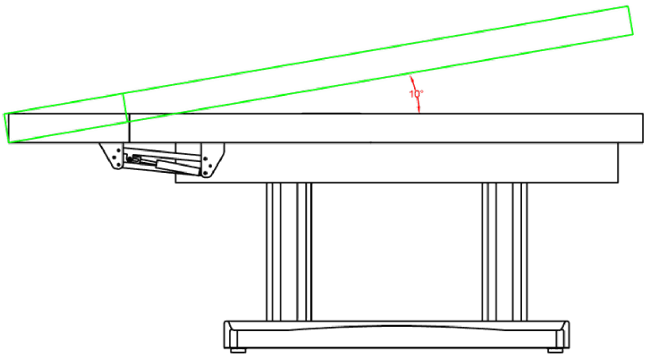
10°